SPECIFICATION FOR CRYSTAL FILTER MCF 35.25-26/10

Number: 91 797
Drawing: 61 9580

1. Electric values

1.0 Number of poles :	10
1.1 Nominal centre frequency f_{nom} :	35.25 MHz
1.2 Centre frequency f_c :	35.25 MHz ± 1.5 kHz
1.3 Bandwidth between 6 dB frequencies :	≥ ± 13 kHz
1.4 Ripple at f_{nom} ± 8.0 kHz :	≤ 1.0 dB
1.5 Insertion loss :	≤ 5.0 dB
1.6 Stop band f_{nom} ± 25 kHz …. ± 5 MHz :	≥ 80 dB
1.7 Terminating impedance (input and output) :	50 Ohm // 0 pF
1.8 Operating temperature range :	-20℃ to +70℃
1.9 Case :	KF 17 (38.4 x 18.2 x 13.0 mm)
1.10 Marking on the case : KRYSTALY CZ / YYWW / 35.25-26/10	YY = year WW = week

2. Characteristics MCF 35.25-26/10

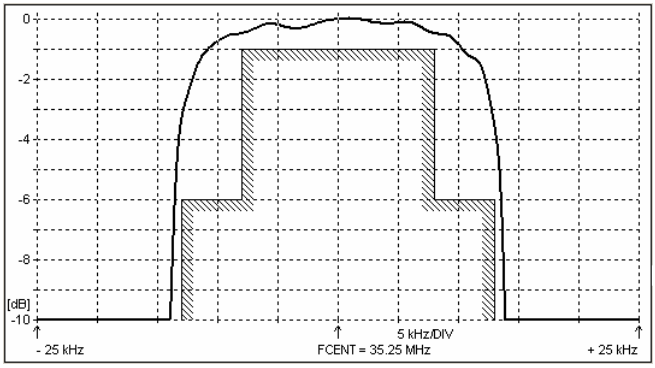

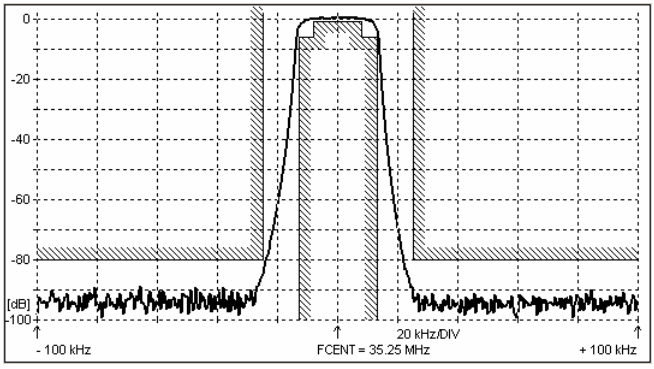

Dimensions [mm]
Case KF-17

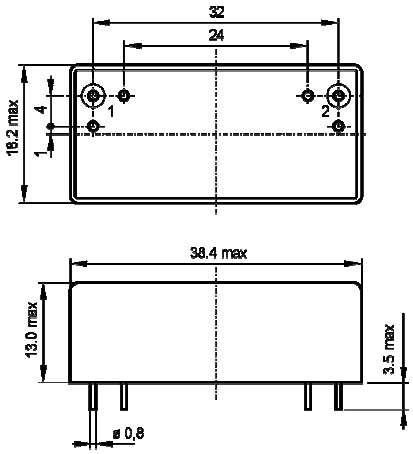

Measurement Circuit

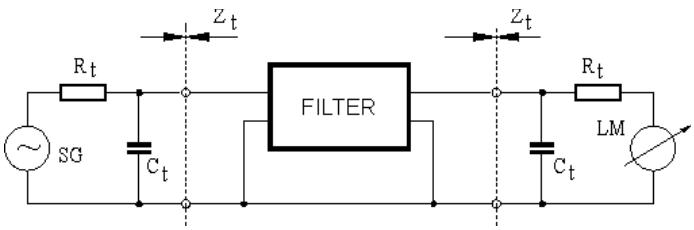

edited	31.08.2011	P. Seidl

KRYSTALY Hradec Králové, a.s. - 500 03 Hradec Králové, Okružní 1144 - CZECH REPUBLIC
PHONE : (+420) 495 408 409 www.krystaly.cz
FAX : (+420) 495 541 258 E-mail : krystaly@wo.cz